robot coupe®

CL R 301

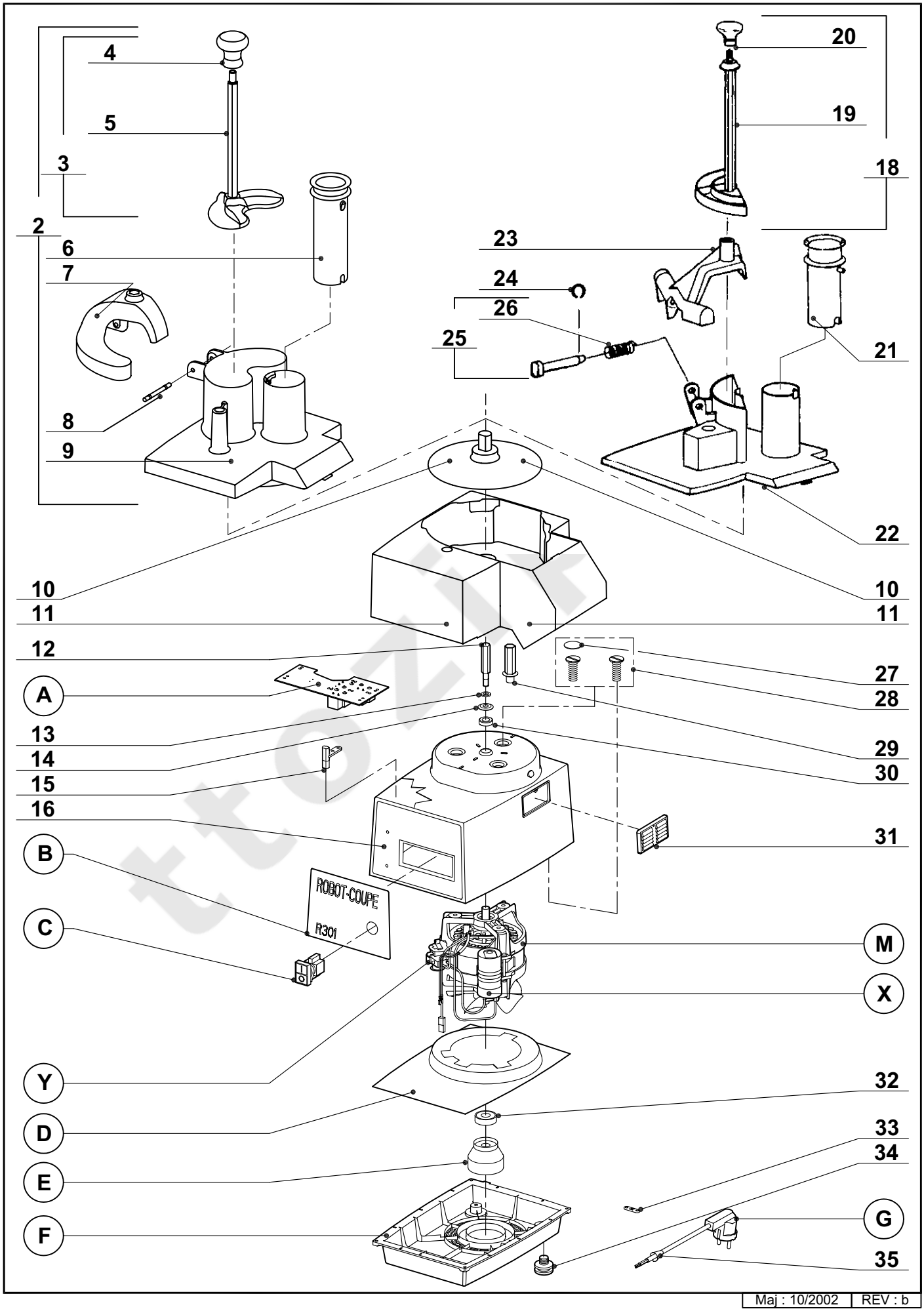

robot coupe

CL-R 301

- (A) CIRCUIT BOARD
- (B) BLIXER 4 NAME PLATE
- (C) ON/OFF SWITCH
- (D) R301 MOTOR DEFLECTOR
- (E) R301 MOTOR STABILISER CONE
- (F) R301 BOTTOM CASING
- (G) POWER CORD
- (M) MOTOR
- (X) CAPACITOR
- (Y) MOTOR RELAY

INDEX	REF.	DESIGNATION	Pricelist in : EUR
2	29922	Veg Lid Assembly	130,75
3	29880	R301C Large Pusher Assy	44,60
4	102021	CL50A PUSHER KNOB SPACER	4,85
5	103703	R301C LARGE PUSHER	41,15
6	118324	CL52D ROUND PUSHER	6,50
7	29921	R301U (C) PUSHER GUIDE	35,55
8	103540	R301C LARGE PUSHER PIVOT PIN ASSY	13,30
9	103534	R301C VEG'PREP LID	48,30
10	100954	R301U SLING PLATE	12,40
11	100951	VEGETABLE SLICER BOWL	144,10
12	100082	R301U DRIVE SHAFT	13,80
13	100096	(C) Spacer R300,R301U Series C	1,05
14	100084	R301U DRIVE SHAFT COLLAR	1,65
15	39358	R301U REED SW/SOCKET ASSEMBLY	4,55
16	130240	R301 TOP CASING	71,75
18	29157	R301U PUSHER PLATE ASSEMBLY	44,65
19	100953	R301U N VEGET.PUSHER (N)	41,70
20	102021	CL50A PUSHER KNOB SPACER	4,85
21	100955	R301U VEGETABLE PUSHER	6,10
22	100950	R301U VEGETABLE LID ONLY	48,40
23	100952	R301U PUSHER GUIDE	16,20
24	203011	R301U HINGE CLIP	1,10
25	100963	R301U HINGE	13,60
26	101054	PUSHER GUIDE SPRING	3,75
27	125257	R301 BOLT COVER	0,60
28	29083	R301U MOTOR SUPPORT SCREW SET	5,75
29	100580	R301 MOTOR SHAFT COVER	2,60
30	500467	R301 MOTOR SEAL 12x22x4.5	1,30
31	125290	R301 VENT COVER	2,55
32	130141	R301 STABILIZER RUBBER	1,70
33	108515	POWER CORD CLIP	0,15
34	100642	R301 RUBBER FOOT	0,15
35	508706	R301 CABLE GROMMET	1,80

robot coupe

CL-R 301

Pricelist in : EUR

N°	M	Voltage	A	B	C	D	E	F	G	
22012	3041 200,70	220 / 50 / 1	39003 115,00	415712 7,60	509091 60,10	125136 8,60	127578 3,50	29243 17,15	507322 10,00	
22014	3049 200,70	115 / 60 / 1	39014 121,65	415712 7,60	509091 60,10	125136 8,60	127578 3,50	29243 17,15	507322 10,00	
22015	3062 212,25	220 / 60 / 1	39003 115,00	415712 7,60	509091 60,10	125136 8,60	127578 3,50	29243 17,15	507322 10,00	

frozip.ru

robot coupe

CL-R 301

Pricelist in : EUR

N°	M	Voltage	X	Y	
22012	3041 200,70	220 / 50 / 1	600018 12,30	500289 13,10	
22014	3049 200,70	115 / 60 / 1	603669 10,55	500296 13,10	
22015	3062 212,25	220 / 60 / 1	603669 10,55	500289 13,10	

frozip.ru

robot coupe®

CL R 301 B

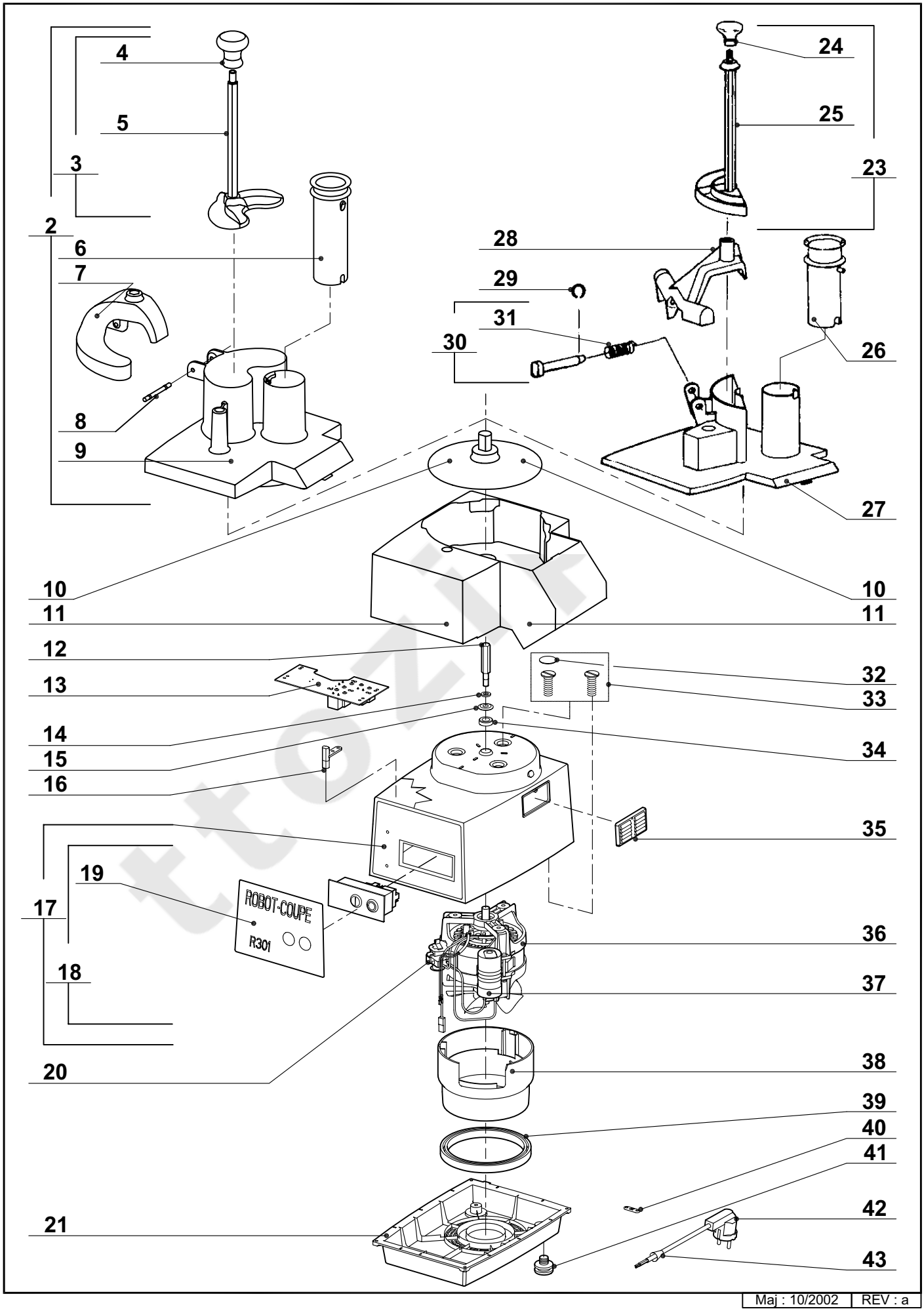

robot coupe

CL-R 301 B

INDEX	REF.	DESIGNATION	Pricelist in : EUR
2	29922	Veg Lid Assembly	130,75
3	29880	R301C Large Pusher Assy	44,60
4	102021	CL50A PUSHER KNOB SPACER	4,85
5	103703	R301C LARGE PUSHER	41,15
6	118324	CL52D ROUND PUSHER	6,50
7	29921	R301U (C) PUSHER GUIDE	35,55
8	103540	R301C LARGE PUSHER PIVOT PIN ASSY	13,30
9	103534	R301C VEG'PREP LID	48,30
10	100954	R301U SLING PLATE	12,40
11	100951	VEGETABLE SLICER BOWL	144,10
12	100082	R301U DRIVE SHAFT	13,80
13	102301	R301 B PCB	75,75
14	100096	(C) Spacer R300,R301U Series C	1,05
15	100084	R301U DRIVE SHAFT COLLAR	1,65
16	29441	R301 ULTRA B REED SWITCH ASS	10,45
17	29430	R301 B TOP CASE	76,30
18	29427	R301 B SWITCH ASSEMBLY	64,65
19	405867	R301B NAME PLATE	7,60
20	500289	R301 RELAY-GRAVITY TYPE	13,10
21	29378	R301B BOTTOM CASE	17,15
23	29157	R301U PUSHER PLATE ASSEMBLY	44,65
24	102021	CL50A PUSHER KNOB SPACER	4,85
25	100953	R301U N VEGET.PUSHER (N)	41,70
26	100955	R301U VEGETABLE PUSHER	6,10
27	100950	R301U VEGETABLE LID ONLY	48,40
28	100952	R301U PUSHER GUIDE	16,20
29	203011	R301U HINGE CLIP	1,10
30	100963	R301U HINGE	13,60
31	101054	PUSHER GUIDE SPRING	3,75
32	101754	BLIXER 3 BOLT COVER	0,60
33	29298	MOT SUP SCREWS ASS B	5,75
34	500467	R301 MOTOR SEAL 12x22x4.5	1,30
35	125290	R301 VENT COVER	2,55
36	3092	R301 ULTRA B MOTOR 240V	200,70
37	600018	R301 CAPACITOR-60mF	12,30
38	117266	R301U B FAN SHIELD	8,60
39	101099	R201 SHOCK ABSORBER	8,90
40	108515	POWER CORD CLIP	0,15
41	101082	R201 RUBBER FOOT	1,05
42	508706	R301 CABLE GROMMET	1,80
43	507322	POWER CORD	10,00

tulip.ru